MATERIAL APPROVAL

Description	Automatic Urinal Flusher
Model	MU-104-5
Brand	MARVEL

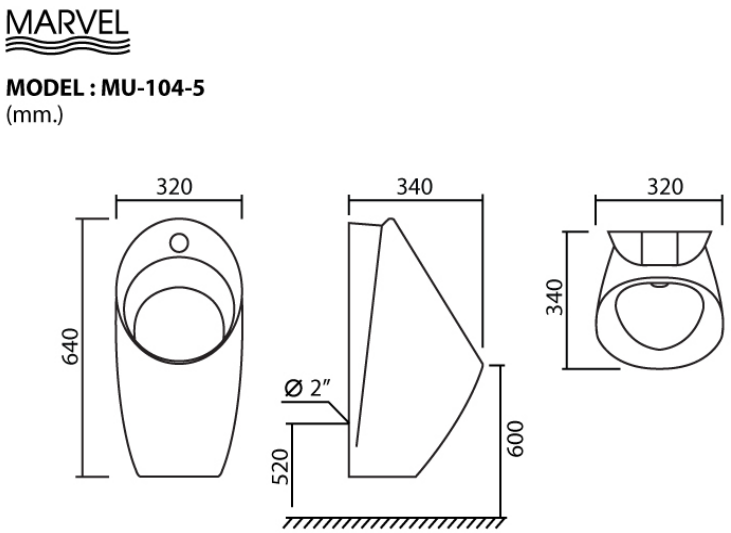

Product Specification

Material	Ceramic White
Install Type	Wall Hung
Operate Voltage	6VDC with AA battery 300,000 cycles / AC 220V with circuit breaker protection with IEC 898 standard
Detection Zone	70 cm. (Adjustable by remote control)
Suitable Water Pressure	0.5 - 6 Bar
Flow Rate	0.5 gpf / 1.5 lpf
Ambient Temperature	1 - 55 °C
Dia. Of Inlet / Outlet Pipe	G1/2" (DN15) / P-trap wall drain 2"
Warranty	3 Years
Standard	ISO9001:2015 / CE / UL